# Product Specification



| | |
|---|---|
| Type | EC Single Inlet Blower |
| Model | SL-F160B-EC-07 |

## Basic Parameters

| | | |
|---|---|---|
| Phase | ~ | 1 |
| Rated Voltage | VAC | 230 |
| Frequency | Hz | 50/60 |
| Rated Speed | RPM | 1860 |
| Max. Input Power | W | 85 |
| Max. Input Current | A | 0.62 |
| Sound level | dBA | 72 |
| Certification | ~ | CE、RoHS |
| Min. Ambient Temperature | ℃ | -25 |
| Max. Ambient Temperature | ℃ | 60 |

## Technical Features

| | |
|---|---|
| Dimensions | 246.9*220.5*130 mm |
| Material of Impeller | Metal |
| Direction of Rotation | Clockwise, Seen on Rotor |
| Surface of Rotor | Plastic Spraying |
| Type of Protection | IP55 |
| Insulation Class | B |
| Operation Mode | S1 |
| Bearing Type | Ball Bearing |
| Motor Protection | Locked Rotor Protection,<br>Thermal Protection,<br>Less and Excessive Voltage Protection,<br>Overcurrent Protection,<br>Soft Start |
| Length of Cable | 500±20mm |
| RoHS | All Material According with RoHS |
| Min./Max. Humidity | 5% - 90% RH |
| Motor Type | External Rotor EC Motor |
| Deviation of Impeller in Axial Direction | ≤ 0.5 mm |
| Deviation of Impeller in Radial Direction | ≤ 0.5 mm |

## Air Performance

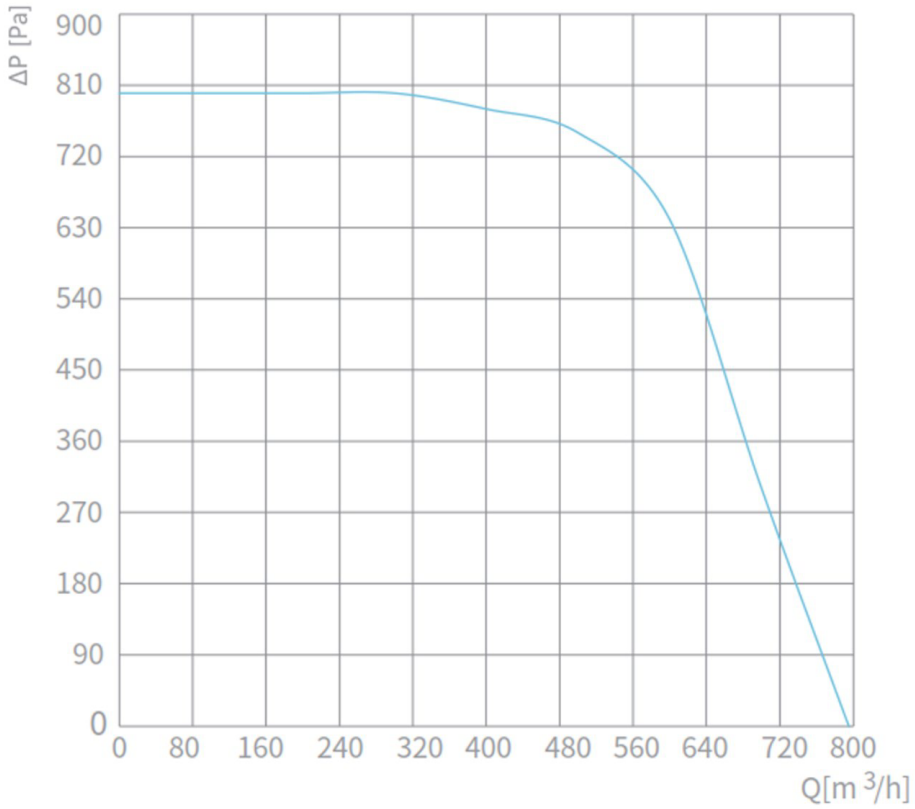


## Outline Drawing

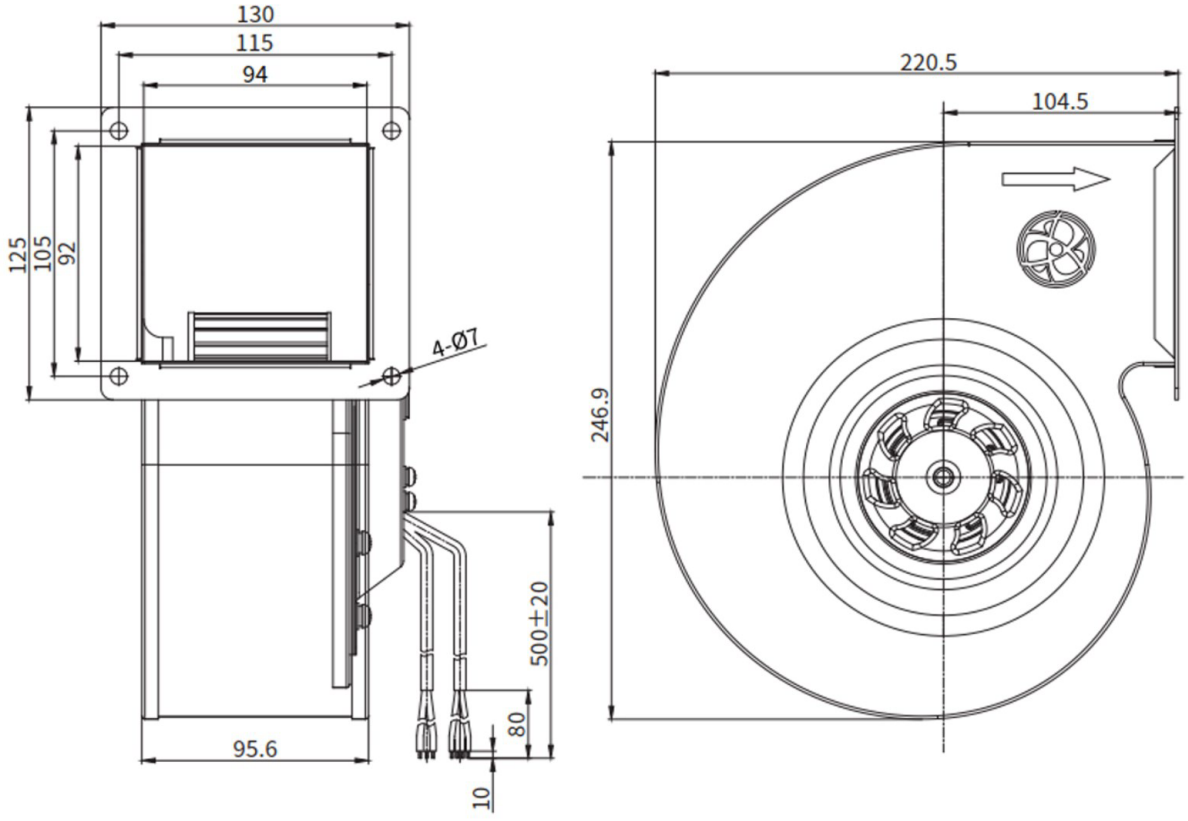

## Wiring Diagram

| Line | Connection | | Color | Function |
|---|---|---|---|---|
| Power Line | PE | | GreenYellow | Protective Earth |
| | U1 | L | Brown | Live Wire |
| | U2 | N | Blue | Neutral Wire |
| Controrl Line | U4 | +10V | Red | Control Power line |
| | U5 | Speed Control | Yellow | 0~10V & PWM Compatible Line |
| | U6 | Signal Feedback | White | RPM Output Signal Line |
| | U7 | GND | Blue | GND |

Power Line

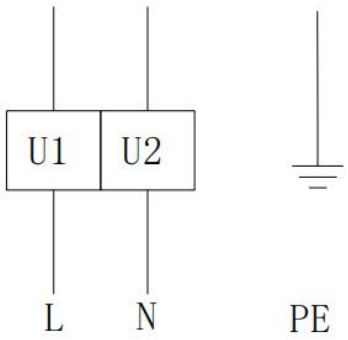


Controrl Line

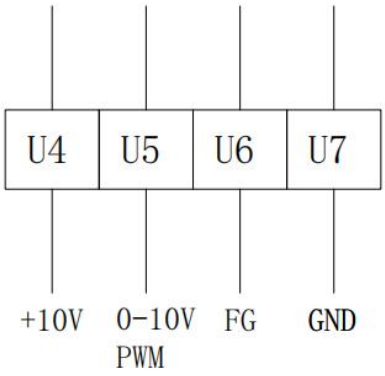

## Additional Notes

1. The power line and control line of the fan should be connected in strict accordance with the wiring diagram to prevent the fan from burning out;

2. Do not connect the white signal wire directly to the red signal wire or the external DC power supply;

3. If the fan does not work after starting, please check the input voltage of the speed regulation, whichmay be improperly connected. To prevent hand or other personal injury caused by sudden start of thefan; Do not touch the impeller or rotor after electrifying;

4. It takes a few seconds for the fan to start after power on. In order to prevent personal injury, do not touch the impeller or rotor under the condition of electrifying or low speed operating;

5. Persons lacking physical, mental or sensory abilities and appropriate practical experience or expertise cannot use the fan unless directed by a person responsible for its safety. Keep out of reach of children.6. If the power wire is damaged, the manufacturer must replace the power cord;

7. As a part of the fan, the motor cannot be used alone without impeller or load;

8. After the product packaging has been disassembled, it should be repackaged if it needs to be kept in storage. The product shall be stored in a clean, well-ventilated warehouse with ambient temperature of -40℃~+80℃, relative humidity of no more than 95%, no corrosive gases in the air, and 15cm above the ground;

9.Please read this technical specification carefully before use;